Surge protection for photovoltaic systems

Surge protection for photovoltaic systems

Photovoltaic application example F.2

Photovoltaic surge protection F.10

Protect your installation from voltage surges!

Photovoltaic (PV) facilities for exploiting renewable energy are at great risk from lightning discharges because of their exposed location and large surface area.
Damage to individual segments or the failure of the entire installation can be the consequence.

To protect all downstream devices, the feeding power lines must be fitted with overvoltage protection. Therefore, a photovoltaic installation should, whatever the case, also be integrated into the existing lightning protection and earthing concept.

As a result of decades of experience in the development and production of electrical connection systems, we have become experts in customised solutions for building installations.

That's why you should safeguard your photovoltaic installation with lighting and overvoltage protection from Weidmüller:

- to protect your building and PV installation
- to increase system availability
- to safeguard your investment

Surge protection means damage prevention

Lightning strikes and voltage surges are frequently the cause of damage to inverters and PV modules. Any operator of a PV installation knows that such damage is often associated with further costs: they are not only burdened with high repair costs, the efficiency of their system can be seriously impaired.

To avoid such failures, it is essential to use lightning and overvoltage protection concepts that are designed to work optimally together. We can help you with this: to ensure that your installation works trouble-free and that you actually achieve the revenue you forecast!

Module box after lightning strike

Standards and requirements

The current standards and directives for overvoltage protection must always be taken into account in the design and installation of any photovoltaic system.

The European draft standard DIN VDE 0100 part 712/E DIN IEC 64/1123/CD (construction of low-voltage systems; requirements for special installations and rooms; photovoltaic supply systems) describes how to select and construct the overvoltage protection system for the PV installation.

In its publication 2010 for buildings with a PV installation, the Association of German Property Insurers (VdS) requires > 10 kW lightning and overvoltage protection in accordance with lightning protection class III.

To ensure that your installation is future-safe, it goes without saying that our components satisfy the requirements.

Optimally protected, with surge protection from Weidmüller

Our surge protection modules in Class I and Class II (B and C arresters) ensure voltage occurrences are quickly limited and that the current is safety discharged. This allows you to avoid expensive damages or even complete outages in your photovoltaic facility.

For buildings with or without lighting protection systems – we have the right product for every application! We can deliver the modules as you require – fully customized and pre-wired into housing.

Deploying surge protection devices (SPDs) in photovoltaic systems

There are a number of special characteristics to be considered when deploying surge protection devices (SPDs) in photovoltaic systems. In contrast to utilizing SPDs in AC voltage circuits, photovoltaic systems represent a DC voltage source with specific characteristics. The system concept must take these specific characteristics into consideration and coordinate the use of SPDs accordingly. For instance SPD specifications for PV systems must be designed both for a maximum no-load voltage of the solar generator (V_{OC} STC = voltage of the unloaded circuit under standard test conditions) as well as with regard to ensuring maximum system availability and safety.

The photovoltaic (PV) is an elementary pillar of power generation in the field of renewable or rather regenerative energy. That does not just apply to Germany; Southern Europe and North America are equally important export markets. For the installation of photovoltaic systems the standard standard IEC 60364-7-712:2002 [1] has been applicable since June 2006. This is a harmonised European standard, which means it is a HD document. Its transitional period ended on 1st March 2008; as a consequence the standard is in force and must be applied. This standard contains information relating to overvoltage protective devices and lightning protection. It does not explicitly require surge voltage protection; however, it is recommended (Figure 1). Equally, the standard points out that when lightning protection is deployed the PV system must be protected by an isolated air-termination system – and the separation distance must be maintained.

External lightning protection

Owing to their large surface expansion and generally exposed installation location photovoltaic systems are particularly risk from atmospheric discharges – such as lightning. At this point there is a need to differentiate between the effects of direct lightning strikes and so-called indirect (inductive and capacitive) strikes. On the one hand the necessity for lightning protection depends on the normative specifications of the relevant standards and on the application itself on the other; in other words, depending on if it is a building or field installation. With building installations a difference is drawn between the installation of a PV generator on the roof of a public building – with an existing lightning protection system – and the installation on the roof of a barn – without a lightning protection system. Field installations also offer large potential targets due to their largearea module arrays; in this case, an external lightning protection solution is recommendable for this type of system to prevent direct lighting strikes.

Normative information is contained in the DIN EN 62305-3 (VDE 0185-305-3) Supplement 2 (design specifications according to protection class and hazard level LPL III) [2] and VdS guidelines 2010 [3] (lightning protection is required in PV systems > 10kW). In addition, surge protection measures are required. For instance, preference should be afforded to separate air-termination systems to protect the PV generator. However, if it is not possible to avoid a direct connection to the PV generator, in other words the safety separation distance cannot be maintained, then the effects of partial lightning currents must be taken into consideration. Fundamentally, shielded cables should be used for the main lines of generators to keep induced overvoltages as low as possible. In addition, if the cross-section is sufficient (min. 16mm² Cu) the cable shielding can be utilized to conduct partial lightning currents. The same applies to the utilization of closed metal housings. Earthing must be connected at both ends of cables and metal housings. That ensures that the main lines of the generator fall under LPZ1 (Lightning Protection Zone); that means that a SPD type 2 suffices. Otherwise, an SPD type 1 would be required.

Utilization and correct specification of surge protection devices

In general, it is possible to consider the deployment and specification of SPDs in low voltage systems on the AC side as standard procedure; however, the deployment and the correct design specification for PV DC generators still remains a challenge. The

reason is firstly a solar generator has its own special characteristics and, secondly, SPDs are deployed in the DC circuit. Conventional SPDs are typically developed for alternating voltage and not direct voltage systems. Relevant product standards [4] have covered these applications for years, and these can fundamentally also be applied to DC voltage applications. However, whereas previously relatively low PV system voltages were realised, today these are already achieving approx. 1000V DC in the unloaded PV circuit. The task is indeed to master system voltages of that order with suitable surge protection devices.

At which positions it is technically appropriate and practical to position SPDs in a PV system depends primarily on the type of system, the system concept and the physical surface area. Figure 2 and 3 illustrate the principle difference: Firstly, a building with external lightning protection and a PV system mounted on the roof (building installation); secondly, an expansive solar energy system (field installation), also fitted with an external lightning protection system. In the first instance – because of the shorter cable lengths – protection is merely implemented at the DC input of the inverter; in the second case SPDs are installed in terminal box of the solar generator (to protect the solar modules) as well as at the DC input of the inverter (to protect the inverter). SPDs should be installed close to the PV generator as well as close to the inverter as soon as the length of cable required between the PV generator and the inverter extends beyond 10 meters (Figure 2). The standard solution to protect the AC side, meaning the inverter output and network supply, must then be achieved by utilizing SPDs type 2 installed at the inverter output and – in the case of a building installation with external lightning protection at the mains feed-in point – equipped with an SPD type 1 surge arrester.

Special characteristics on the DC solar generator side

Until now protection concepts for the DC side always used SPDs for normal AC mains voltages, whereby L+ and L- respectively were wired to earth for protection. Thereby, the SPDs were rated for at least 50 percent of the maximum solar generator no-load voltage. After a number of years insulation faults can occur in the PV generator. As a consequence of this fault in the PV system the full PV generator voltage is then applied to the non-faulty pole in the SPD and results in an overload event. If the load on SPDs based on metal-oxide varistors from a continuous voltage is too high this can possibly result in their destruction or trigger the disconnecting device. In particular in PV systems with high system voltages it is not possible to completely exclude the possibility of

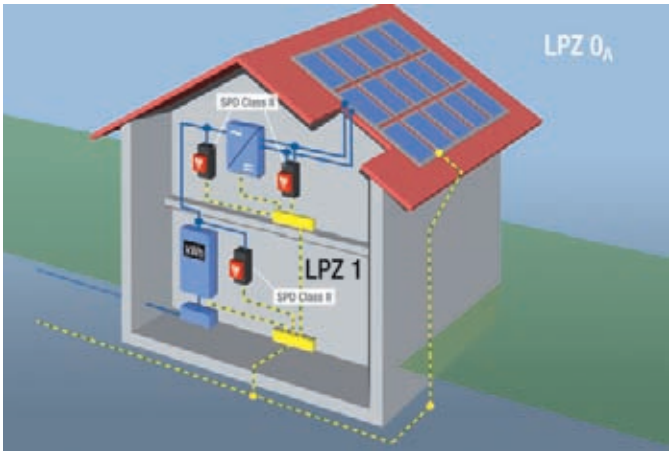

Figure 1: Schematic diagram from standard IEC 60364-7-712:2002

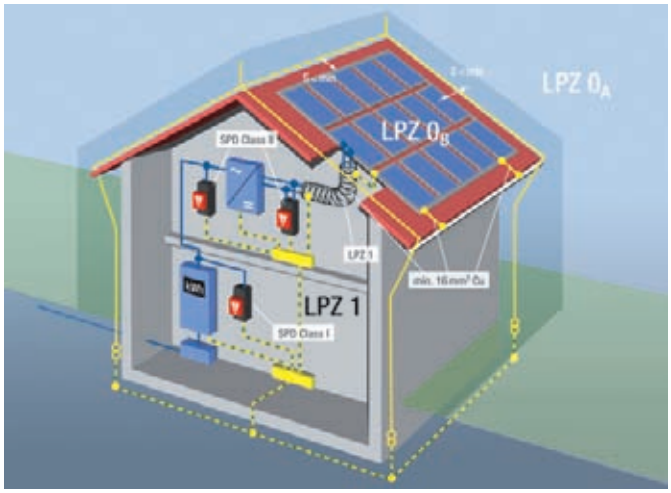

Figure 2: Building installation with external lightning protection system, in compliance with air termination distances

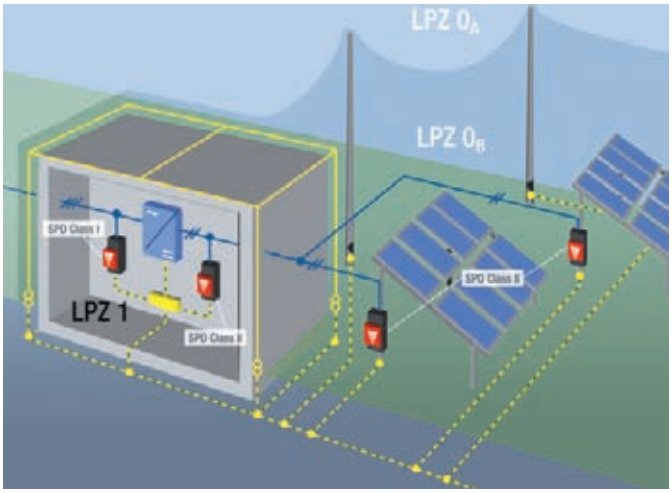

Figure 3: Field installation with external lightning protection system

Photovoltaic application example

a fire developing under unfavourable circumstances caused by a non-extinguished switching arc when the disconnection device is triggered. Even upstream overload protection elements (fuses) are not a solution to this probability, as the short-circuit current of the PV generator is only slightly higher than that of the rated current. Today, PV systems with system voltages of approx. 1000V DC are increasingly being installed to keep power losses as low as possible. To ensure that SPDs can master such high system voltages the star connection consisting of three varistors has proven reliable and has become established as a quasi standard (Figure 4). If an insulation fault occurs two varistors in series still remain, which effectively prevents the SPD from being overloaded. Nonetheless, it is also the case here that so-called leakage currents flow in the varistor itself. The likelihood of higher leakage currents increases as the varistor ages and frequent overvoltage loads. In unfavourable circumstances higher leakage currents can in turn (as described above) result in a fire developing due to the insufficient DC switching capacity of the disconnecting device.

That means there are two different aspects to be considered – a too high continuous voltage applied to the SPD caused by a fault in the PV system and the flow of a high leakage current, for example due to frequent overvoltage loads. A solution is offered by a star connection (Figure 5) consisting of two varistors and a spark gap to the earth potential. The star connection prevents a too-high continuous current being applied to the SPD in the event of an insulation fault in the PV circuit; the spark gap itself prevents a leakage current. In other words: The spark gap prevents the suppressor circuit from being activated should an insulation fault occur. In reality, the connection in series of a metal-oxide varistor and a spark gap (here a gas discharge tube) is nothing new; it offers a reminder of the days of the old valve-type arresters. Utilization in a DC circuit is the only difference. To effectively extinguish the gas discharge tube the voltage applied must be less than the minimum arc voltage.

In conclusion it is possible to say: with a star connection composed of two varistors and a spark gap it is possible to achieve a suppressor circuit that is absolutely free of leakage-currents and prevent undesired actuation of the disconnecting device. This in turn effectively prevents the scenario described above of a fire developing. And at the same time any influencing of an insulation monitoring device is also prevented. That facilitates a completely unearthed, floating construction – even in conjunction with very high DC voltages.

In this instance Weidmüller offers a sophisticated, applications oriented solution with its SPD type 2 surge arrester PU II 2+1 550 V up to VOC STC < 1000 V DC. (Figure 5).

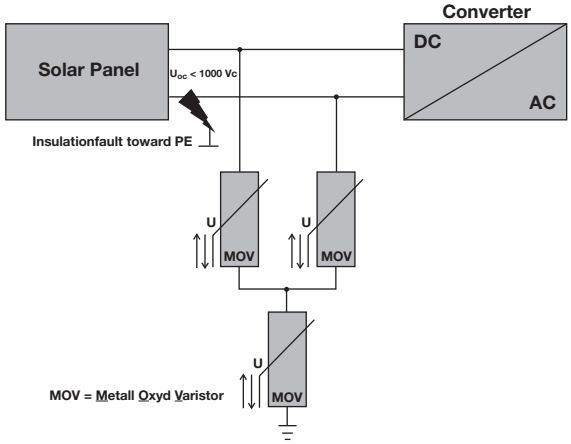

Figure 4: Y-shaped protective circuitry with three varistors

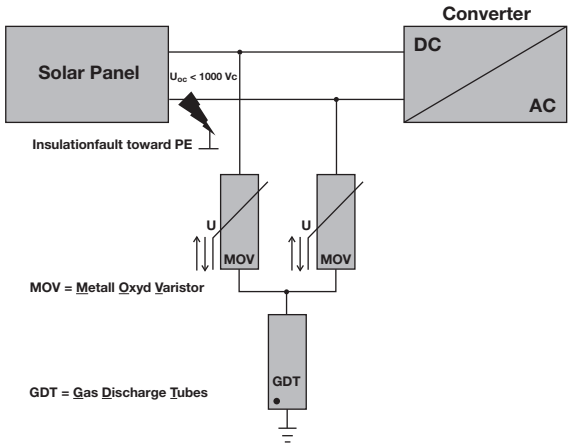

Figure 5: Y-shaped protective circuitry with two varistors and a spark gap

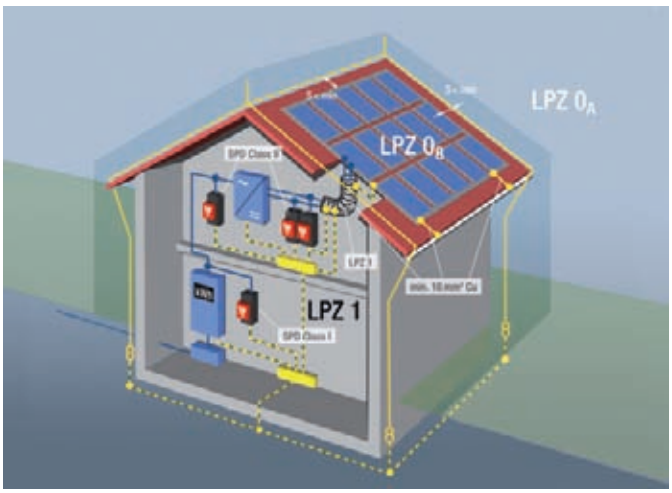

Figure 6: Building installation with external lightning protection, not in compliance with air termination distances

Practical applications

As already noted, a difference is drawn between building and field installations in practical solutions. If an external lightning protection solution is fitted, the PV generator should preferably be integrated into this system as an isolated arrester device system. IEC 62305-3 specifies that the air termination distance must be maintained. If it cannot be maintained then the effects of partial lightning currents must be taken into consideration. On this point the standard for protection against lightning IEC 62305-3 Supplement 2 states in Section 17.3: 'to reduce induced overvoltages shielded cables should be used for the main lines of the generator'. If the cross-section is sufficient (min. 16 mm² Cu) the cable shielding can also be used to conduct partial lightning currents. Supplement (Figure 5) - Protection against lightning for photovoltaic systems – issued by the ABB (Committee for Lightning Protection and Lightning Research of the (German) Association for Electrical, Electronic and Information Technologies) states that the main lines for the generators should be shielded. That means that lightning current arresters (SPD type 1) are not required, notwithstanding, however, surge voltage arresters (SPD type 2) are necessary on both sides. As Figure 6 illustrates a shielded main generator line offers a practical solution and achieves LPZ 1 status in the process. In this manner, SPD type 2 surge arresters are deployed in compliance with standards specifications.

Ready-to-fit solutions

To ensure on-site installation is as straightforward as possible Weidmüller offers ready-to-fit solutions to protect the DC and AC sides of inverters. Plug and Play boxes with type 2 surge arresters both for DC and for the combination with the AC side reduce installation times; they are designed to offer IP 65 rated protection and equipped with MC4 connections. Weidmüller offers PV boxes for one or two solar strings as well as the combination with the AC side and a disconnecting device on the DC side in compliance with DIN VDE 0100 (VDE 0100) Part 712 (Figure 6). Weidmüller also supplies customised assemblies on request.

The products described below protect your photovoltaic installation, secure your investment and increase the availability of the installation.

PU II 2+1 550 V / 40 kA

- 470/690 V overvoltage arrester
- Suitable for PV-voltage of up to 1,000 V
- High energy absorption with I_{max}: 40 kA per disc

PU II 4 280 V / 40 kA

- 230/400 V overvoltage arrester
- Suitable for the TN CS power system
- High energy absorption with I_{max}: 40 kA per disc

PU BC

- 230/400 V combined lightning and voltage surge arrester
- Single-pole version with I_{imp}: 16 kA
- High energy absorption with I_{max}: 60 kA per PU BC
- Option of V-form connection of conductors

PV-Box AC/DC

- Plug and Play - all connections are hard-wired internally
- MC4 connections, other connections are also possible
- PU II surge arrester especially for PV systems
- Customer-specific assemblies are available.

Photovoltaic application example

Our products offer you the following advantages:

- Plug-in varistor top sections are easy to replace
- Protection is quickly available, that means longer service life of the protected installation
- Low residual voltage and consequently safety of the installation
- Thermal and dynamic protection of arresters with mains disconnection in the event of fault
- Coded voltage level prevents plugging in of incorrect module

Note:
Country-specific standards and guidelines must be observed

Literature

[1] DIN VDE 0100(VDE 0100) part 712: 2006-06, Requirements for special installations or locations. Solar photovoltaic (PV) power supply systems
[2] DIN EN 62305-3 (VDE 0185-305-3)2006-10 Protection against lightning, part 3: Protection for structures and persons
[3] VdS Directive 2010:2005-07 Risk-oriented lightning and surge protection; Guidelines for loss prevention, VdS Schadenverhütung Verlag (publishers)
[4] DIN EN 61643-11 (VDE 675-6-11): 2007-08 Low-voltage surge protective devices – Part 11: surge protective devices for use in low-voltage power systems – requirements and tests

Modular use of our surge protection components

If a lightning protection system is already present on the building, this must be the highest point of the entire system. All modules and cables of the photovoltaic installation must be installed below the air terminations. Separation distances of at least 0.5 m to 1 m must be adhered to.

Also, the external lightning protection system requires the installation of a lightning arrester of class I in the incoming supply of the building. If no lightning protection system is present, the use of class II arresters is sufficient.

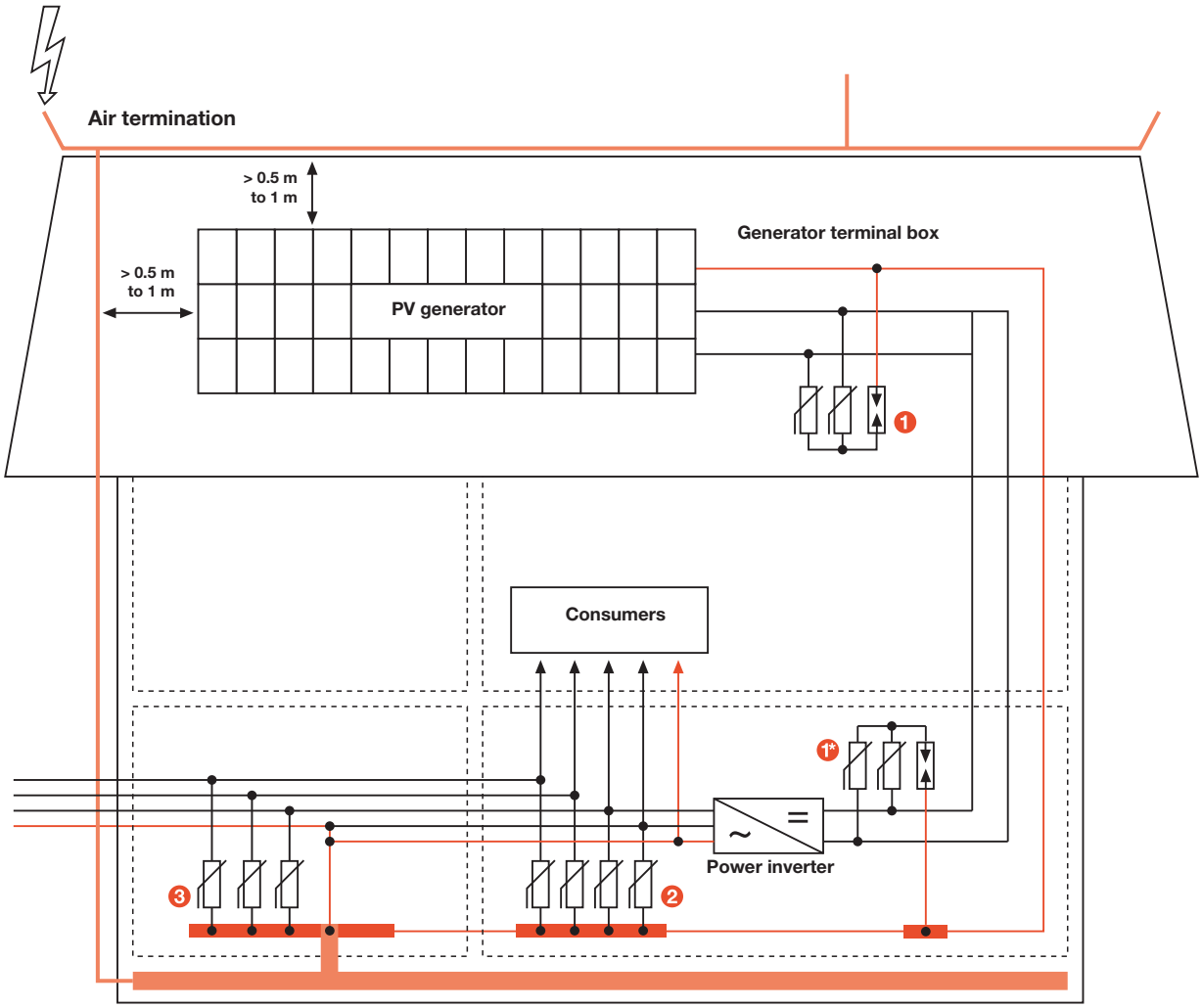

(example drawing: no liability taken)

You get from us safe surge protection for all components to be protected.

1 **PU II 2+1 550 V / 40 kA**
Y-connection

1* **PU II 2+1 550 V / 40 kA**
For a large distance between PV generator and inverter

2 **PU II 4 280 V / 40 kA**
For a large distance between inverter and house incoming supply

3 **PU BC**
In the event of an existing lightning protection system

Photovoltaic surge protection

PV-Box DC

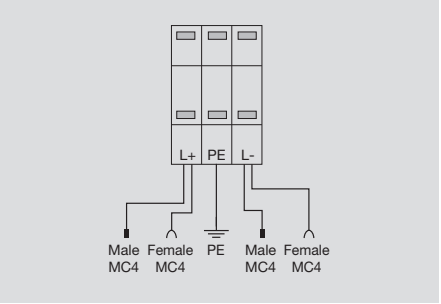

PV-Box DC 2

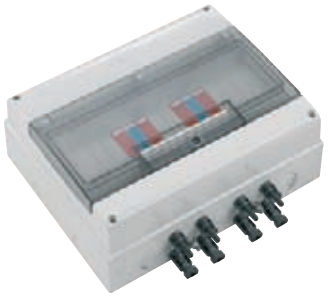

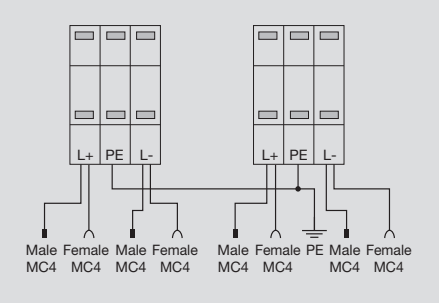

Technical Data

Technical Data	PV-Box DC	PV-Box DC 2
Suitably for DC Voltage ≤ 1,000 V	yes	yes
Number of strings to be protected	1	2
Number MC4 plugs male	2	4
Number MC4 plugs female	2	4
Number of PE-connection	1	1
Surge protection for AC	no	no
Direct connection via measurement disconnect terminal	no	no
DC-Main switch (50 A DC)	no	no
Housing	IP65	IP65

Dimensions		PV-Box DC	PV-Box DC 2
Length x width x height	mm	190 x 185 x 106	250 x 330 x 140

Note	PV-Box DC	PV-Box DC 2
	Suitable for the protection of the DC side of **one string**. The connection works via MC4 plugs with Uoc: < 1,000 V.	Suitable for the protection of the DC side of **two strings**. The connection works via MC4 plugs with Uoc: < 1,000 V.

Ordering data

Version	Type	Qty.	Order No.	Type	Qty.	Order No.
	PV-Box DC	1	**8959710000**	PV-Box DC 2	1	**8959720000**

Note		

Accessories

Note		

PV-Box AC/DC

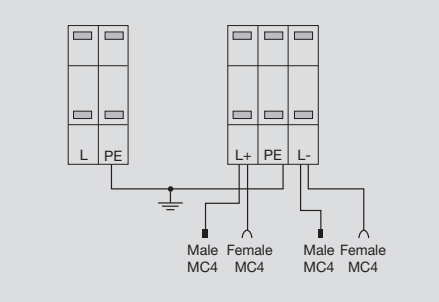

PV-Box AC/DC 2

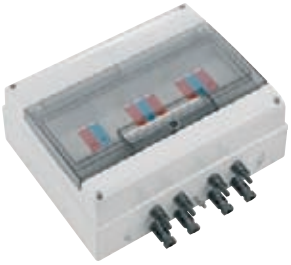

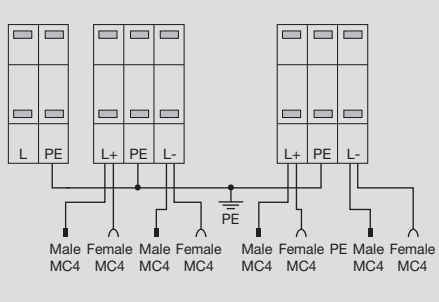

Technical Data

Technical Data		
Suitably for DC Voltage ≤ 1,000 V	yes	yes
Number of strings to be protected	1	2
Number MC4 plugs male	2	4
Number MC4 plugs female	2	4
Number of PE-connection	1	1
Surge protection for AC	yes	yes
Direct connection via measurement disconnect terminal	no	no
DC-Main switch (50 A DC)	no	no
Housing	IP65	IP65

Dimensions			
Length x width x height	mm	185 x 185 x 110	250 x 330 x 145

Note		
	Suitable for the protection of the **DC side** of **one string**. The connection for DC works via MC4 plugs with Uoc: < 1,000 V. The 230 V AC **are direct connected**.	Suitable for the protection of the **DC side** of **two strings**. The connection for DC works via MC4 plugs with Uoc: < 1,000 V. The 230 V AC **are direct connected**.

Ordering data

Version	Type	Qty.	Order No.	Type	Qty.	Order No.
	PV-Box AC/DC	1	**8959730000**	PV-Box AC/DC 2	1	**8959740000**
Note						

Accessories

Note		

Photovoltaic surge protection

PV-Box Multistring

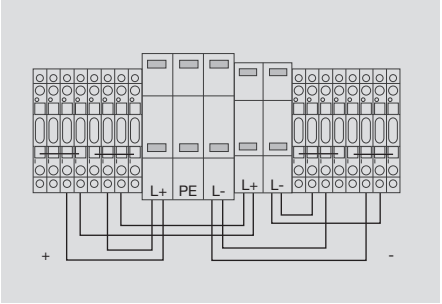

Technical Data

Technical Data	
Suitably for DC Voltage ≤ 1,000 V	no
Number of strings to be protected	8
Number MC4 plugs male	no
Number MC4 plugs female	no
Number of PE-connection	1
Surge protection for AC	no
Direct connection via measurement disconnect terminal	yes
DC-Main switch (50 A DC)	yes
Housing	IP65

Dimensions		
Length x width x height	mm	250 x 330 x 145

Note	
	Suitable for **8 Strings** up to Uoc < 500 V via measurement disconnect terminals. All parts are wired with the surge protection device. The DC-main switch works up to 50 A. The external wiring goes directly in the measurement terminals.

Ordering data

Version	Type	Qty.	Order No.
	PV-Box Multistring	1	**8959750000**

Note	

Accessories

Note	